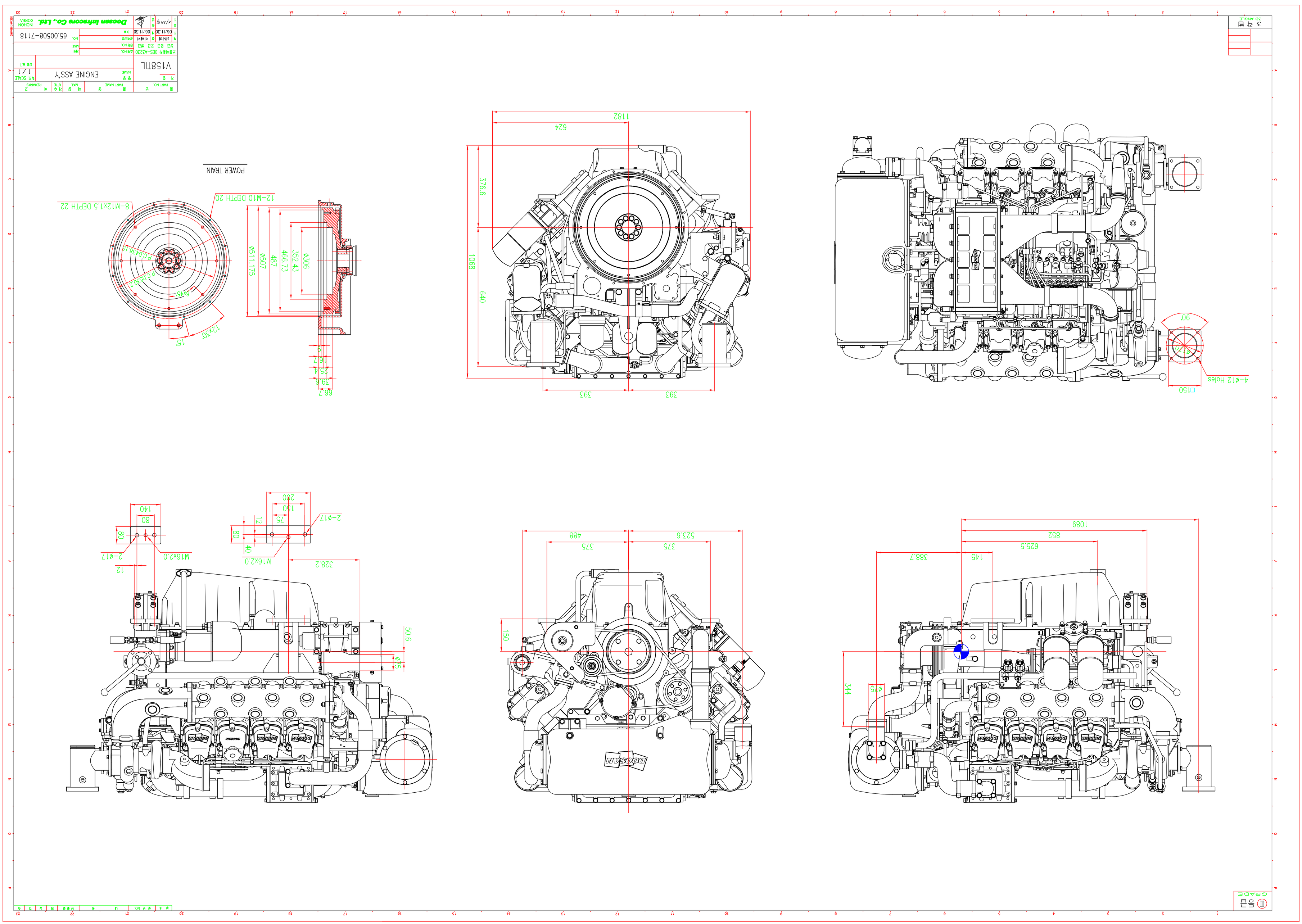

POWER TRAIN
8-M12x1.5 DEPTH 22
12-M10 DEPTH 20
P.C.D438.19
P.C.D530.2
8x45°
12x30°
15°
ø511.175
ø507
487
466.73
352.43
ø306
66.7
16.7
25.4
39.6
1182
624
376.6
1068
640
393
393
90°
4-ø12 Holes
□150
140
80
80
2-ø17
M16x2.0
12
200
150
75
12
80
40
2-ø17
M16x2.0
328.2
50.6
ø75
488
375
523.6
375
150
1089
852
625.5
388.7
145
344
ø75